01 / USB-B INPUT, ESD PROTECTION, FERRITE AND BULK CAPACITOR (USB domain: VBUS, VBUS_F)

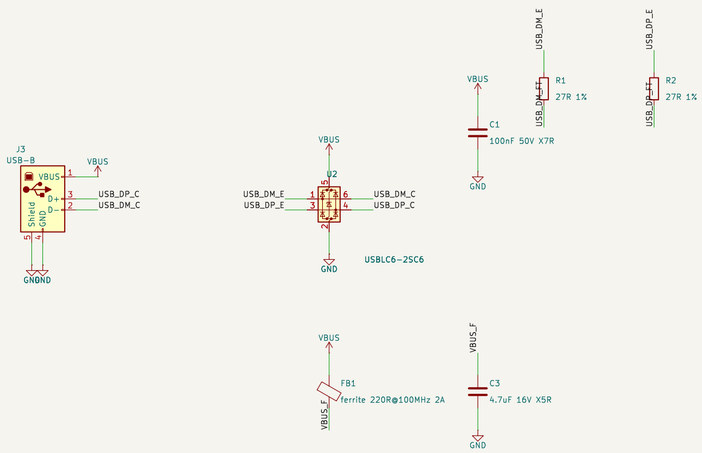


02 / FT231XS USB-UART BRIDGE, 27R + 47 pF USB TERMINATION, BYPASS, ACTIVITY LEDs (3V3_FT domain)

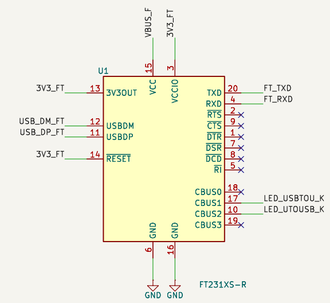


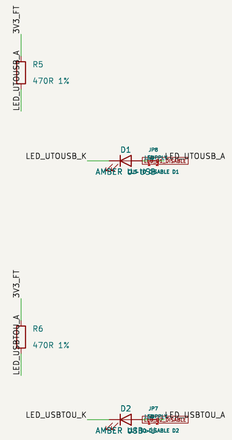


03 / DUAL FIXED-DIRECTION TRANSLATOR TXU0202 (3V3_FT <-> HOST +3V3), R3 DAMPING, R4 IDLE PULL-UP

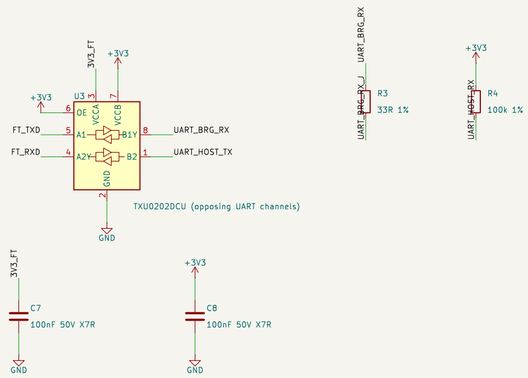


04 / GADGETEER U SOCKETS J1 (HOST) AND J2 (CHAIN), CUTTABLE SOLDER JUMPERS JP3..JP6

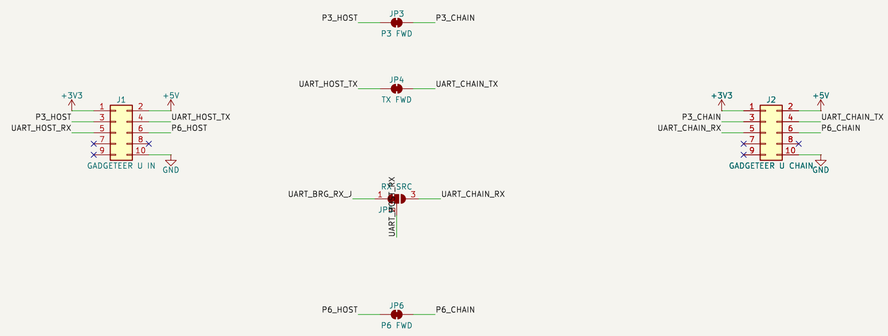


05 / TEST PADS (bottom side, observe only; net name = label)

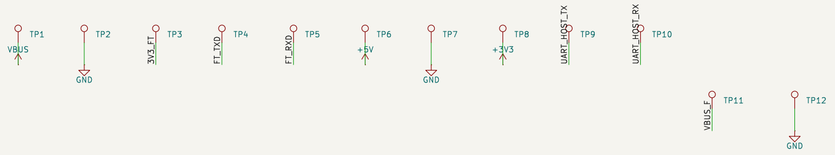


Domains: USB VBUS/3V3_FT and HOST +3V3/+5V stay separate. TXU0202 disconnects both outputs when either supply is absent; common GND is deliberate.

Direction: host TX (socket 4) -> U3 B2 -> A2Y -> FT_RXD; FT_TXD -> U3 A1 -> B1Y -> R3 -> JP5 -> host RX (socket 5).

U3 TXU0202DCUR: VCCA=3V3_FT, VCCB=+3V3, OE=+3V3. C7/C8 bypass the two supply pins. No auto-direction sensing and no DIR straps.

JP5 is a source selector for host RX: 1-2 bridged = this bridge drives it (default); 2-3 = downstream chain board drives it. NEVER bridge 1-2 and 2-3 together. JP3, JP4, JP6 bridged = pass-through to J2; cut to isolate.

USB-B shell (pad 5 on J3, two holes) is bonded to GND. D1 "U>USB" on CBUS2 (TXLED#). D2 "USB>U" on CBUS1 (RXLED#); LED branch (R5, R6, D1, D2) may be DNP.

PWR_FLAG derived: only nets with a power_in pin and no power_out pin are flagged (+3V3, +5V, VBUS_F). VBUS, GND (USB_B power_out) and 3V3_FT (FT231X 3V3OUT) are already driven.

Pins J1/J2 7-9 are [UN] on socket type U: no connect. U1 pins 1 2 5 7 8 9 18 19 are no connect (datasheet v1.2 table 3.6 note 1 and CBUS defaults).

CERN-OHL-S-2.0 | KiCad only | black solder mask, white silkscreen | v0B STUDY: schematic + placement stage, not fabrication ready.

USBLC6 internal channels:1/6 DM and3/4 DP: C/E names identify each external terminal.

+3V3 PWR_FLAG

+5V PWR_FLAG

VBUS_F PWR_FLAG

Generated from design-contract.json by tools/create_schematic.py

Smoothieboard v2 extension board, Gadgeteer socket type U (UART)

**Smoothieware / CERN-OHL-S-2.0**

Sheet: /

File: usb-serial.kicad_sch

**Title: Smoothie USB serial breakout (U)**

| Size: A2 | Date: 2026-10-11 | **Rev: v11** |
|---|---|---|
| KiCad E.D.A. 9.0.8 | | Id: 1/1 |