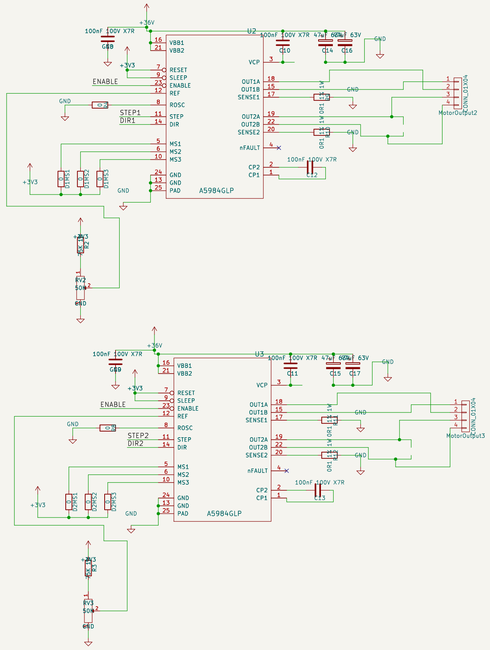

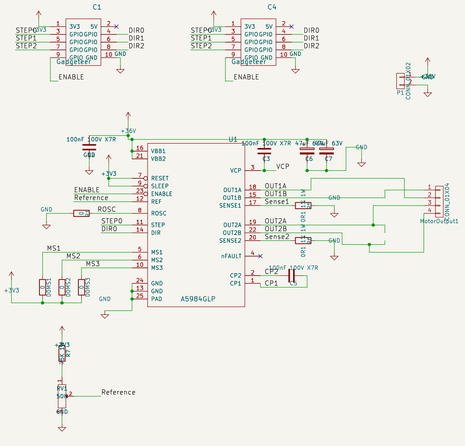



Sheet: /		
File: a5984-3ch.kicad_sch		
Title:		
Size: A1	Date:	**Rev:**
KiCad E.D.A. 9.0.8		Id: 1/1