1 GADGETEER Y: HOST IN (J1) — SEVEN CUTTABLE CHAIN LINKS (JP3–JP9) — CHAIN OUT (J2)

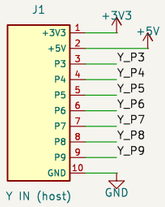

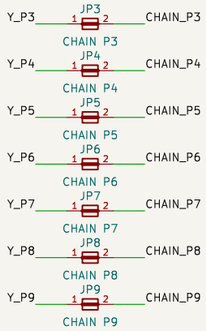

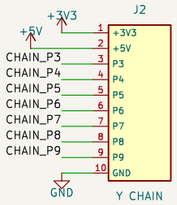



Y_Pn = host side (LED taps hang here). CHAIN_Pn = downstream side. Links are bridged at the factory: cut the copper strip to isolate a downstream board.

2 SEVEN ACTIVE-LOW GPIO INDICATORS + POWER LED + LED FEED LINK: LED LIT = GPIO PIN LOW

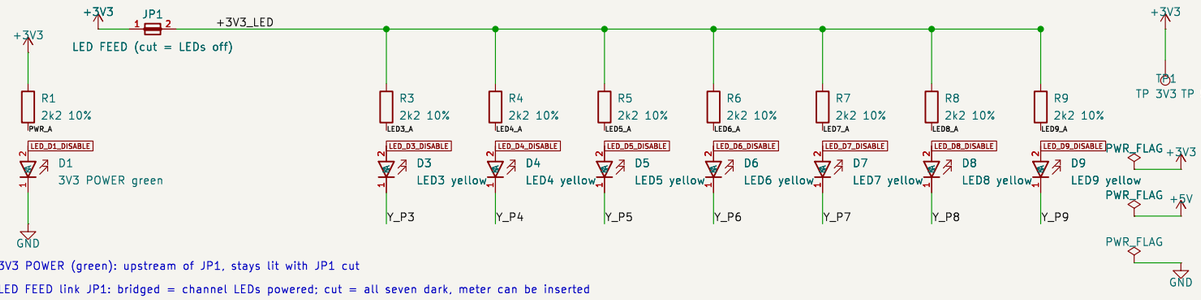

3V3 POWER (green): upstream of JP1, stays lit with JP1 cut

LED FEED link JP1: bridged = channel LEDs powered; cut = all seven dark, meter can be inserted

3 TEST PADS (BOTTOM SIDE) AND PWR_FLAGS

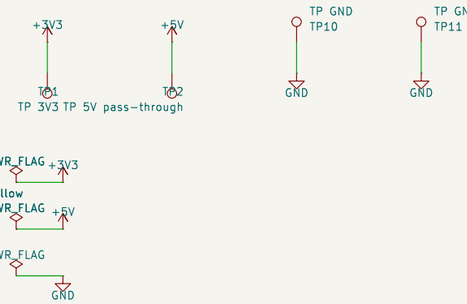

PWR_FLAGs: +3V3, +5V and GND are supplied by the host through J1 (no regulator on this board);

+5V has NO local load: it is only passed to J2 pin 2 and test pad TP2 (flag is deliberate).



NOTES

1. Pin map (maintainer M2, Gadgeteer Y-type table, CLAUDE.md section 3): pin 1 +3V3, pin 2 +5V, pins 3–9 GPIO (seven), pin 10 GND. J1 and J2 are identical sockets, pin for pin.
2. LIT = PIN LOW. Active-low indicators (maintainer amendment [an]): LED anode = +3V3_LED through 1k5, cathode = host GPIO. Dark = pin high, hi-Z or no power. Do not use on pull-down inputs.
3. Factory link states: JP1 (LED FEED) and JP3–JP9 (CHAIN) are all CLOSED (bridged copper). Change links with power off.
4. Reverse-cable note: host headers are unshrouded and unpolarised. A 180 degree reversed cable puts 3V3 on host GND and may reverse-bias LEDs: D9 can see 5.25 V, exceeding its 5 V absolute reverse rating. Leakage at 5 V does not bound this fault. No benign reverse-cable claim; assembly and fault qualification outstanding. NO HOT-PLUG.
5. Power budget: 20 mA contract ceiling from host 3V3 (hard bound 19.83 mA with VF = 0; nominal all seven lit 8.7 mA). Host 3V3 allocation is unresolved. 0 mA from +5V. Max 2.33 mA per GPIO pin (VF = 0 bound).
6. LED footprint LED_APT1608_K1A2: pad 1 = CATHODE, pad 2 = ANODE (captured Kingbright terminals). Symbol LED_K1A2 pin 2 = A (top), pin 1 = K (bottom). Assembly orientation requires supplier verification.
7. Study version v10: unqualified, not for fabrication. CERN-OHL-S-2.0, KiCad only.

STUDY: unqualified, not for fabrication

Seven active-low LED indicators on a Gadgeteer Y socket + chain socket

Smoothieware / CERN-OHL-S-2.0

Sheet: /

File: led-breakout.kicad_sch

Title: Smoothie LED breakout (Y)

Size: A3	Date: 2026-10-03	**Rev: v10**
KiCad E.D.A. 9.0.8		Id: 1/1