

Sheet: /
File: endstop-inputs.kicad_sch

Title:

Size: A4	Date:	**Rev:**
KiCad E.D.A. 9.0.8		Id: 1/8

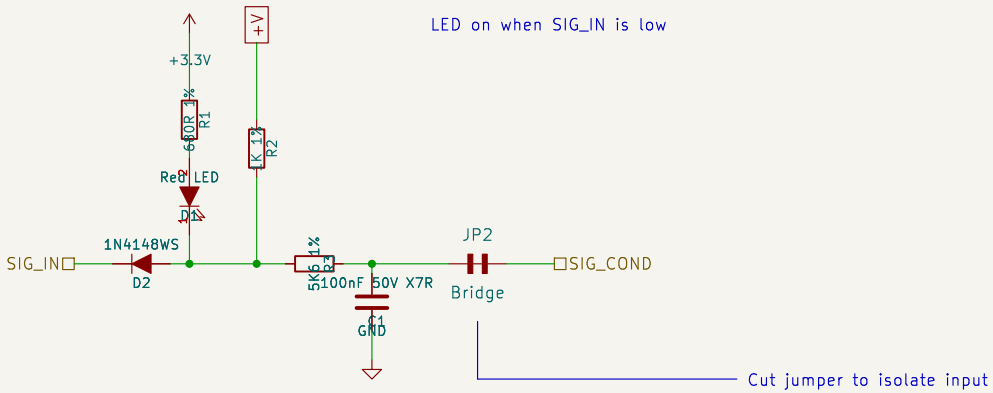

Sheet: /Endstop1/		
File: Endstop.kicad_sch		
Title:		
Size: A4	Date:	**Rev:**
KiCad E.D.A. 9.0.8		Id: 2/8

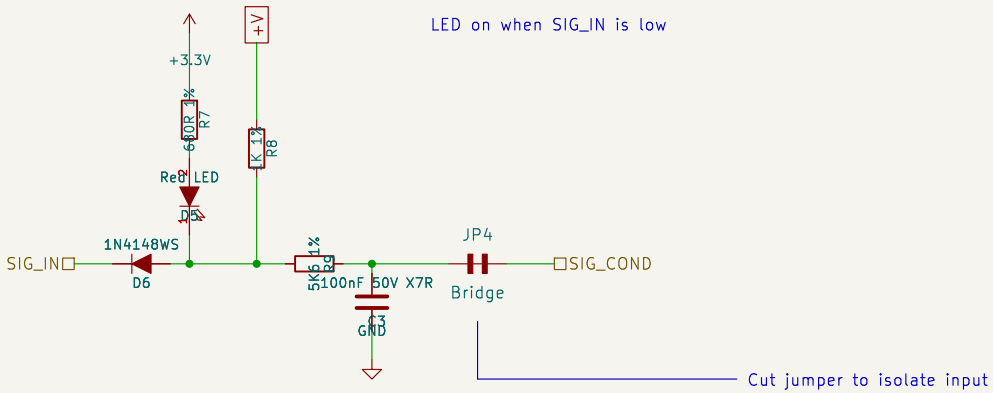

Sheet: /Endstop3/		
File: Endstop.kicad_sch		
Title:		
Size: A4	Date:	**Rev:**
KiCad E.D.A. 9.0.8		Id: 3/8

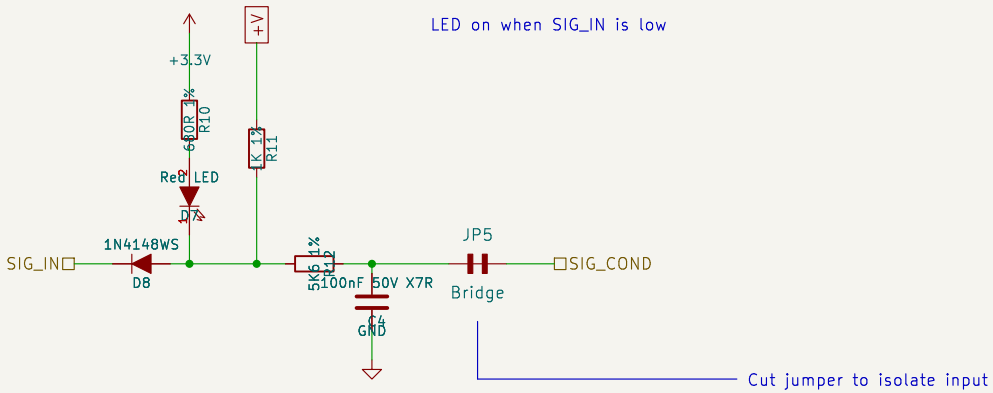

Sheet: /Endstop4/		
File: Endstop.kicad_sch		
Title:		
Size: A4	Date:	**Rev:**
KiCad E.D.A. 9.0.8		Id: 4/8

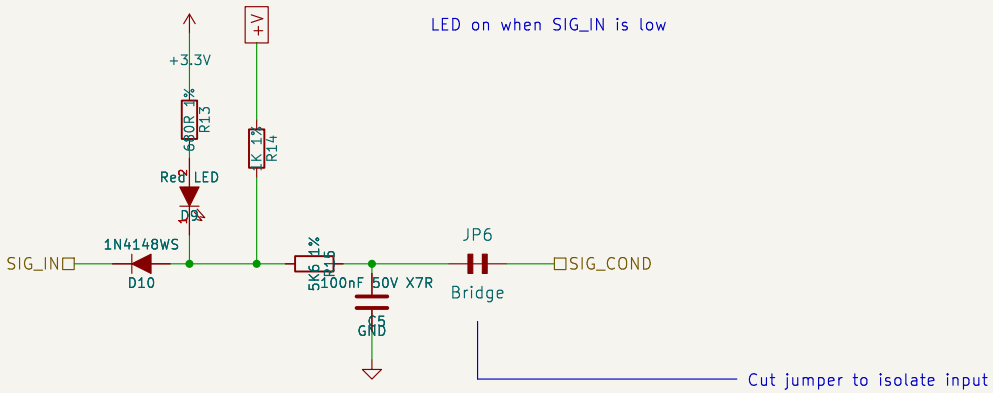

Sheet: /Endstop5/		
File: Endstop.kicad_sch		
Title:		
Size: A4	Date:	**Rev:**
KiCad E.D.A. 9.0.8		Id: 5/8

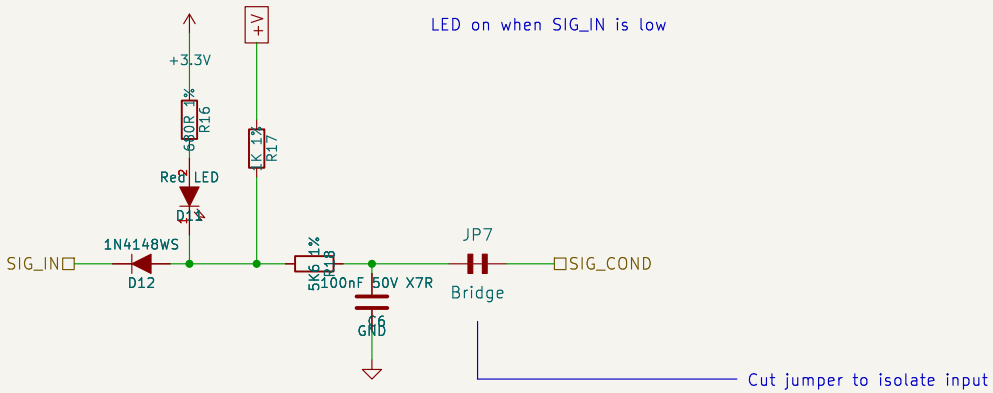

Sheet: /Endstop6/		
File: Endstop.kicad_sch		
Title:		
Size: A4	Date:	**Rev:**
KiCad E.D.A. 9.0.8		Id: 6/8

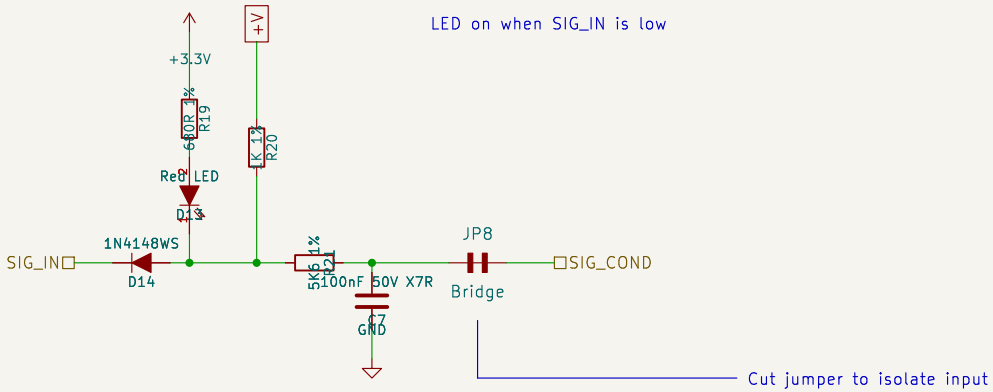

Sheet: /Endstop7/		
File: Endstop.kicad_sch		
Title:		
Size: A4	Date:	**Rev:**
KiCad E.D.A. 9.0.8		Id: 7/8

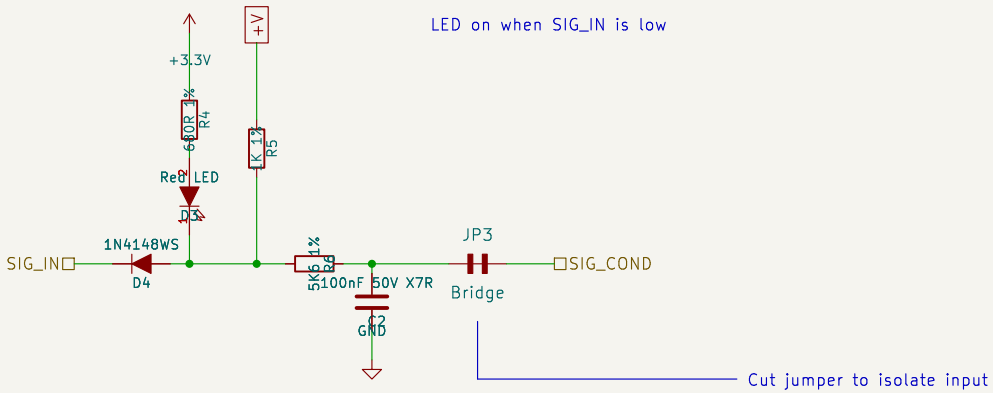

Sheet: /Endstop2/		
File: Endstop.kicad_sch		
Title:		
Size: A4	Date:	**Rev:**
KiCad E.D.A. 9.0.8		Id: 8/8