01 / GADGETEER Y SOCKET (HOST, IN), CHAIN JUMPERS JP1..JP7 (ALL OPEN) AND CHAIN SOCKET (J2)

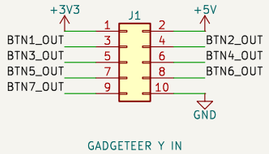

GADGETEER Y IN

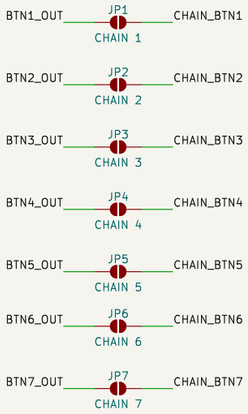

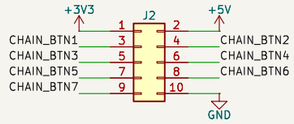

GADGETEER Y CHAIN

TEST POINTS (observation only)

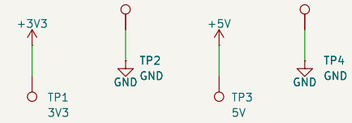

POWER FLAGS (host-supplied rails)

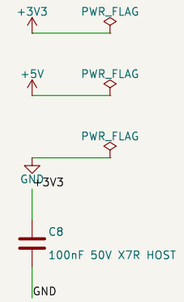

02 / BUTTON CELLS 1..7: SW to GND, 1 k series, 100 nF filter, 10 k pull-up (identical cells)

BUTTON 1 (SW1)

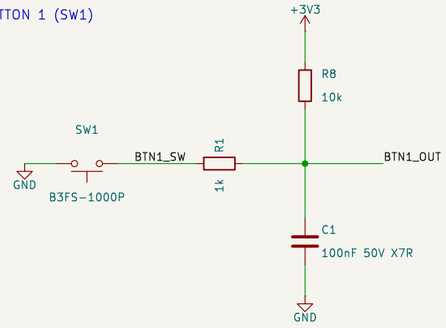

BUTTON 2 (SW2)

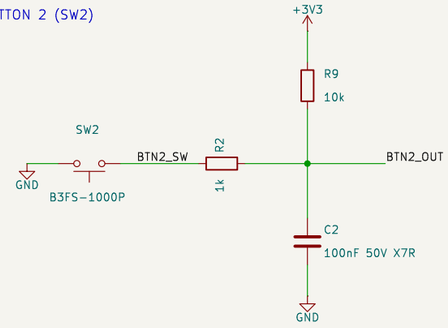

BUTTON 3 (SW3)

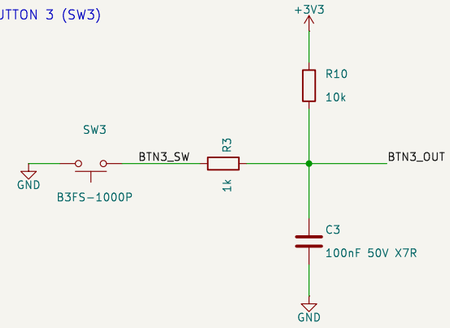

BUTTON 4 (SW4)

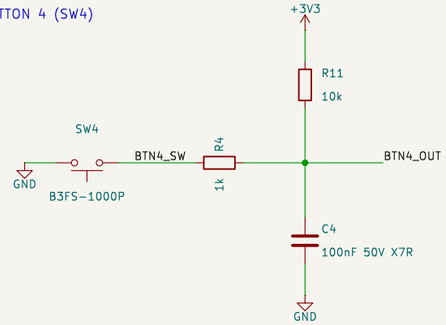

BUTTON 5 (SW5)

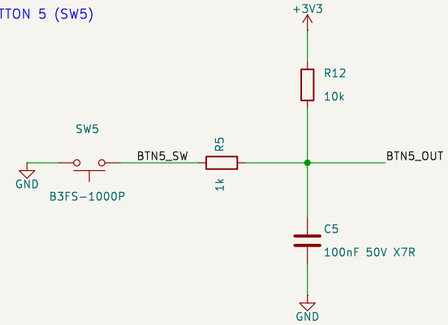

BUTTON 6 (SW6)

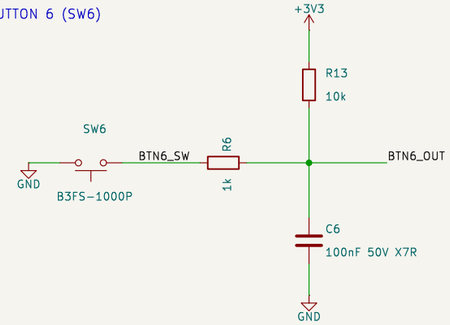

BUTTON 7 (SW7)

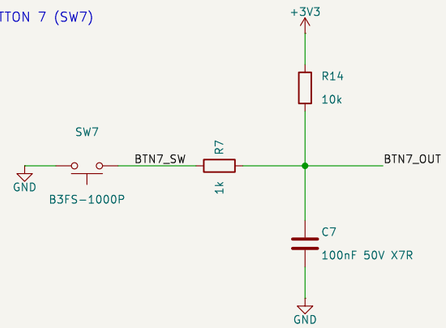

Pin map (D1, CLAUDE.md type-Y row): 1 +3V3, 2 +5V, 3..9 = BTN1_OUT..BTN7_OUT (button n on pin n+2), 10 GND. J2 repeats J1 pin for pin.

NO / ACTIVE LOW: normally-open switches; released = HIGH (10 k to +3V3), PRESS = LOW (about 0.3 V). NOT an E-STOP or safety input. No hot-plug.

Debounce (R3): 1 k series + 100 nF per line; press edge 0.13 ms, release edge 1.11 ms (generic CMOS VIL 0.3 VDD / VIH 0.7 VDD, assumed). Glitch filter only: host poll >= 100 Hz recommended.

Chain: J2 pins 1, 2, 10 are direct. JP1..JP7 (CHAIN n) are OPEN in every released population. To give pin n to a downstream driver: remove R_n, R_(n+7), C_n, then bridge JPn.

Protection (R8): no TVS on the on-board buttons in v01; 1 k series + 100 nF to GND per line. Upgrade path: TPD4E1U06DCK at the switch nodes BTNn_SW. ESD item S052 stays unverified.

Power: 3.3 V local load 0 mA idle, 2.23 mA with all seven pressed; 5 V local load 0 mA (+5V only passes J1 to J2 and to TP3). No LEDs, no regulator, no external power input.

SW1..SW7: Omron B3FS-1000P (4 pads, two pads per terminal; KiCad pads 1 = terminals 4-3, pads 2 = terminals 2-1). Solder jumpers and test points are excluded from the BOM.

WARNING: the physical V2 host header may differ from the pin map above (wiki disagrees; pin-1 marking not inspected). First-article continuity check of pins 1, 2, 10 is mandatory.

CERN-OHL-S-2.0 | KiCad only | black solder mask, white silkscreen | v02 STUDY, generated from design-contract.json by tools/create_schematic.py; not built or tested.

Generated from design-contract.json by tools/create_schematic.py
Seven buttons on one Gadgeteer Y socket (BTN7-S), active low, study version
Smoothieware / CERN-OHL-S-2.0

Sheet: /		
File: buttons.kicad_sch		
Title: Smoothie button board BTN7-S		
Size: A3	Date: 2026-10-04	**Rev: v05**
KiCad E.D.A. 9.0.8		Id: 1/1